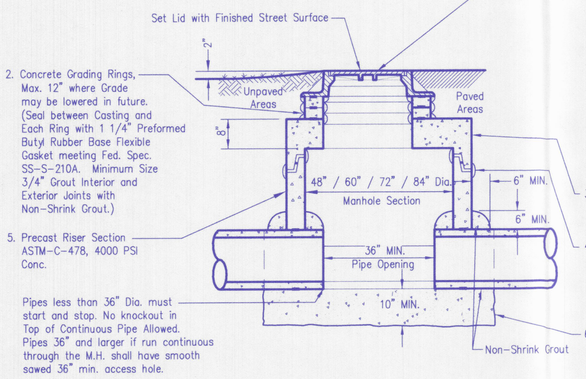

Notes

1. TRAFFIC AREAS: Manhole Frame & Cover: ASTM-48, Latest Edition, Class 35 With 24" Diameter lid. 7" Min. Height 400# Min. Wgt. Equal to East Jordan 1022-3 or Dewey RCR 247 with extra heavy duty cover, machined bearing surface & concealed lift holes.

   For curb inlet (CI) installations equal to East Jordan No. 7030, M3 Grate for valley inlets and M4 for slope inlets. Type T-1 (Straight) or T-2 (Roll Curb) back.

   NON-TRAFFIC AREAS: 4" or 7" hgt. 285# min. wgt., equal to East Jordan 1022-1 with Heavy Duty Cover, machined bearing surface & concealed Lift Holes. Set Top 2" above Grade (after Earth settlement).

   Area Drain (A.D.) installations equal to East Jordan Beehive #6488 casting, or equal, with adaptor ring.

3. Precast flat top section, ASTM C-478 4000 PSI concrete with special reinforcing and proper size opening for specified inlet installation.

4. JOINTS: O-Ring Rubber Gasket Joint ASTM C-443 or ASTM C-76 with preformed Joint Filler Strip, or Forsheda 114 Pre-lubricated manhole joint Seal conforming to ASTM C443 or equal. Interior and exterior of joint to be grouted with Non-shrink grout.

6. POURED CONCRETE BASE SECTION, 3500 PSI Concrete, with smooth invert channels accurately shaped to a depth equal to 3/4 of the Inside Dia. of Sewer Pipe. Manhole shelf to slope towards channel at 1:12, minimum base overhang 6"

Shallow Storm Manhole, Inlet or Area Drain

S003.dwg Date: 09-10-96 — NO SCALE

Notes

East Jordan Iron Works, Inc. (or approved equal) NO. 7030 catch basin curb inlet, with M3 grate for valley inlets or M4 grate for slope inlets. Type T-1 back for straight curbs Type T-2 back for roll curbs

All connecting pipes shall be grouted with a high strength non-shrink grout.

Precast units shall conform to ASTM C-478

The inlet shall be backfilled with "B" Borrow and mechanically compacted in 6" lifts to 95% of standard density ASTM-698

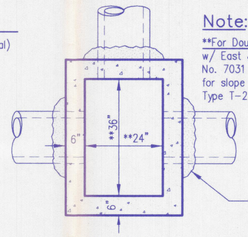

Plan View

Note:

**For Double Curb Inlet – use 24" W x 74" L Box w/ East Jordan Iron Works, Inc. or approved equal No. 7031 catch basin curb inlet, with M4 grate for slope inlets or M3 grate for valley inlets. Type T-2 back for roll curbs.

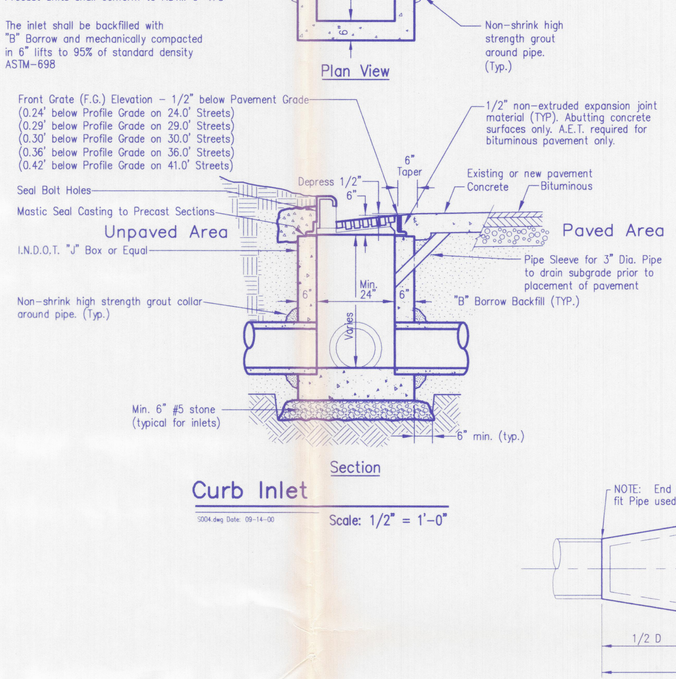

Section

Curb Inlet

S004.dwg Date: 09-14-00 — Scale: 1/2" = 1'-0"

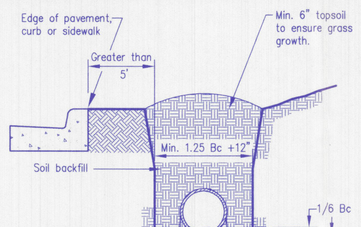

Greater than 5' from edge of pavement

Note:

All bedding & initial backfill shall be installed in 6" to 12" balanced lifts

A minimum 9" of clearance shall be provided on each side of the installed pipe

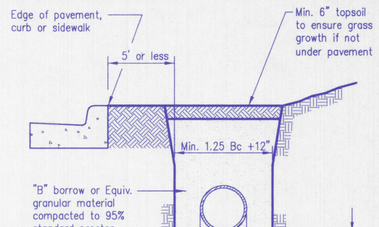

Beneath or within 5' of edge of pavement

Note:

All bedding & initial backfill shall be installed in 6" to 12" balanced lifts

A minimum 9" of clearance shall be provided on each side of the installed pipe

Depth of Bedding Material Below Pipe

D	(d) Min.
27" & Smaller	3"
30" to 60"	4"
66" & Larger	6"

Legend:

Bc = Outside Diameter
D = Inside Diameter
d = Depth of Bedding Material Below Pipe

Reinforced Concrete Pipe Storm Sewer Bedding

S012.dwg Date: 10-14-96 — NO SCALE

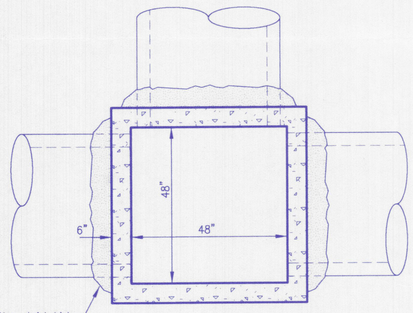

Plan View
Below Flat Top

Notes

For Curb Inlet in paved areas: East Jordon No. 7030 catch basin curb inlet with M4 grate for slope inlets, or equal, with adapter ring if required. Type T-2 back for roll curbs.
For area inlet in non-paved areas: East Jordan #6488 casting, or equal, with adaptor ring.

For manhole in paved areas: East Jordan #1022-1 casting with Type A Extra Heavy Duty solid cover, or equal.
For manhole in non-paved areas: East Jordan #1022-1 with Type A Extra Heavy Duty solid cover, or equal.

All connecting pipes shal be grouted with a high strength non-shrink grout.

Precast box shall conform to ASTM C-478

Reinforcement shall be W3.0xW2.0 wire fabric for precast units

The inlet shall be backfilled with "B" Borrow and mechanically compacted in 6" lifts to 95% of standard density ASTM 698

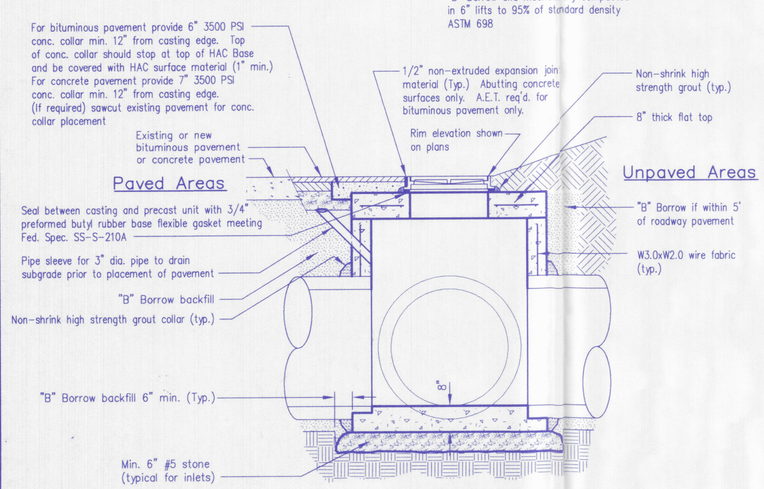

Section

Precast 48" x 48" Box

S028.dwg Date: 09-25-00 — Scale: 1/2" = 1'-0"

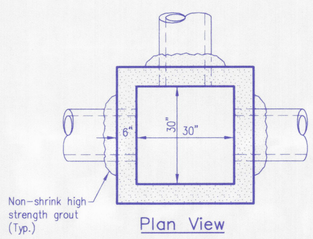

Plan View

Notes

For Area Inlet in pavement East Jordon #8313 casting with Type M grate or equal. For area inlet in non-paved areas: East Jordan #6488 casting, or equal, with adaptor ring.

For Manhole East Jordon #8313 casting with Type A solid cover or equal. Contractor may substitute East Jordan #1022-1 casting with Type A solid cover, or equal, with adapter section.

All connecting pipes shall be grouted with a high strength non-shrink grout.

Precast box shall conform to ASTM C-478

Reinforcement shall be W3.0xW2.0 wire fabric for precast units

The inlet shall be backfilled with "B" Borrow and mechanically compacted in 6" lifts to 95% of standard density ASTM 698

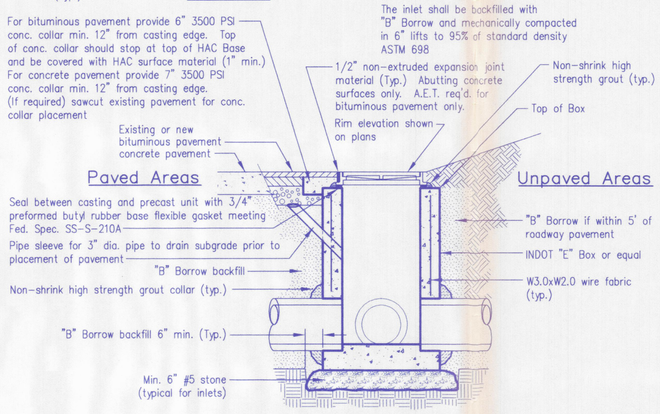

Section

Precast "E" Box

S021.dwg Date: 09-18-00 — Scale: 1/2" = 1'-0"

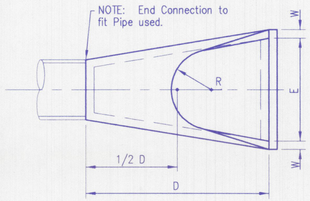

TOP VIEW

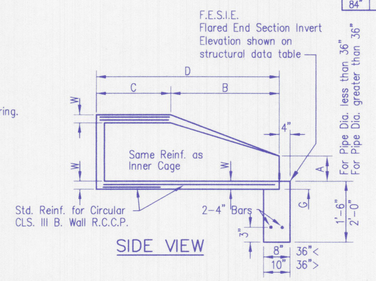

SIDE VIEW

END VIEW

Concrete End Section

S005.dwg Date: 3-16-01 — NO SCALE

PIPE DIA.	WGT. (LBS)	WALL	A	B	C	D	E	G	R	SLOPE
12"	530	2"	5"	2'-0"	4'-7/8"	6'-7/8"	2'-0"	2"	9"	2:1
15"	740	2 1/4"	6"	2'-3"	3'-10"	6'-1"	2'-6"	2 1/4"	11"	2:1
18"	990	2 1/2"	10"	2'-3"	3'-10"	6'-3"	3'-0"	2 1/2	12"	2:1
21"	1280	2 3/4"	10"	2'-11"	3'-2"	6'-1"	3'-6"	2 3/4"	13"	2:1
24"	1520	3"	10"	3'-7 1/2"	2'-6"	6'-5"	4'-0"	3"	14"	2:1
27"	1930	3 1/4"	10 1/2"	4'-0"	2'-11 1/2"	6'-1 1/2"	4'-6"	3 1/4"	14 1/2"	3:1
30"	2190	3 1/2"	1'-0"	4'-6"	1'-7 3/4"	6'-1 3/4"	5'-0"	3 1/2"	15"	3:1
33"	3200	3 3/4"	1'-1 1/2"	4'-10 1/2"	3'-3 1/4"	8'-1 3/4"	5'-6"	3 3/4"	17 1/2"	3:1
36"	4100	4"	1'-3"	5'-3"	2'-10 3/4"	8'-1 3/4"	6'-0"	4"	20"	3:1
42"	5380	4 1/2"	1'-9"	5'-3"	2'-11"	8'-2"	6'-6"	4 1/2"	22"	3:1
48"	6550	5"	2'-0"	6'-0"	2'-2"	8'-2"	7'-0"	5"	22"	3:1
54"	8240	5 1/2"	2'-3"	5'-5"	2'-11"	8'-4"	7'-6"	5 1/2"	24"	2:1
60"	8730	6"	2'-11"	5'-0"	3'-3"	8'-3"	8'-0"	5"	*	2:1
66"	10710	6 1/2"	2'-6"	6'-0"	2'-3"	8'-3"	8'-6"	5 1/2"	*	2:1
72"	12520	7"	3'-0"	6'-6"	1'-9"	8'-3"	9'-0"	6"	*	1.86:1
78"	14770	7 1/2"	3'-0"	7'-6"	1'-9"	9'-3"	9'-6"	6 1/2"	*	1.82:1
84"	18160	8"	3'-0"	7'-6 1/2"	1'-9"	9'-3 1/2"	10'-0"	6 1/2"	*	1.5:1

Storm Sewer General Notes:

1. Contractor shall comply with all local, state and federal codes, ordinances, rules, regulations, orders and other legal requirements of municipal authorities which bear on the performance of the work.

2. The contractor is cautioned that the location and/or elevation of existing utilities as shown on these plans is based on records of various utility companies, and where possible measurements taken in the field. The information is not to be relied on as being exact or complete. The contractor must contact the appropriate utility company at least 48 hours before any excavation to request exact field location of utilities.

   Indiana Underground Utility Locate Service,
   Phone 1-800-382-5544

3. Material specifications shall be in conformance with applicable portions of the INDOT standard specifications, (latest edition) unless specifically stated otherwise on these plans, contract documents or local code.

4. Reinforced concrete pipe (Class III min.) and precast flared end sections with rubber gaskets shall meet the requirements ASTM C-76 and C-443. Rubber gaskets shall be "Gip Seal" as manufactured by Forsheda Pipe Seal Company or approved equal.

Morley and Associates, INC.
Consulting Engineers/Surveyors/Architects
600 S.E. Sixth Street
Evansville, Indiana 47713
(812) 464-0595

All ideas, designs, calculations, and arrangements indicated or represented by this drawing are owned by and the property of Morley and Associates, Inc. and were created for the use on and in connection with the specified project. None of such ideas, designs, calculations, and arrangements shall be used by or disclosed to any person, firm, or corporation for any purpose whatsoever without the written permission of Morley and Associates, Inc.

Written dimensions on these drawings shall have precedence over scale dimensions. Contractors shall verify and be responsible for all dimensions and conditions on this job. Morley and Associates, Inc. assumes no responsibility for errors or omissions in these drawings.

Revisions

No.	By	Date	Description

2-5-0
RONALD S. LONDON REGISTERED No. PE 10101229 STATE OF INDIANA PROFESSIONAL ENGINEER

Project: Asbury Pointe
A Development by Jagoe Land Corporation

Sheet Title: Storm Sewer Details

Scale: As Shown

Designed By: R.S.L. — Job Number: 5540-4(
Drawn By: G.A.M. — Date: 2/05/0
Filename: J:\5540\Civil\StormDetai
Sheet Number: C-13

FILE = J:\5540\Civil\StormDetails.dwg PLOTTED = 2/05/04 8:30 AM