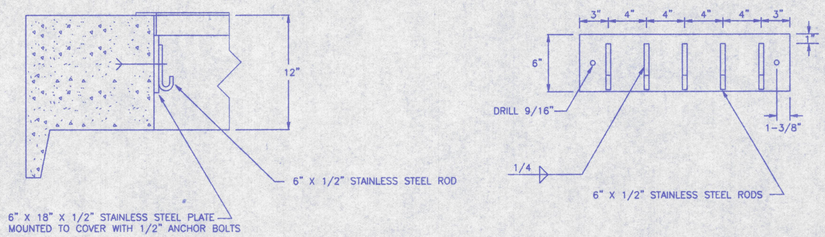

FLOAT BRACKET DETAIL

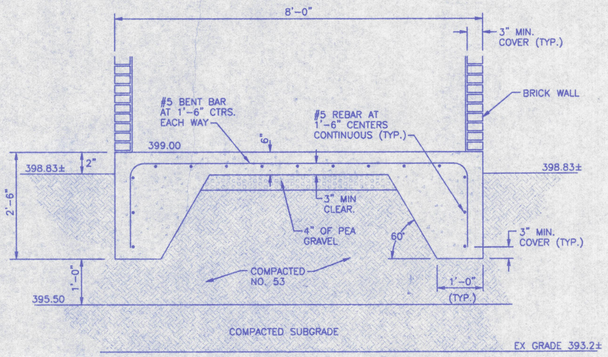

LIFT STATION FOOTING DETAIL

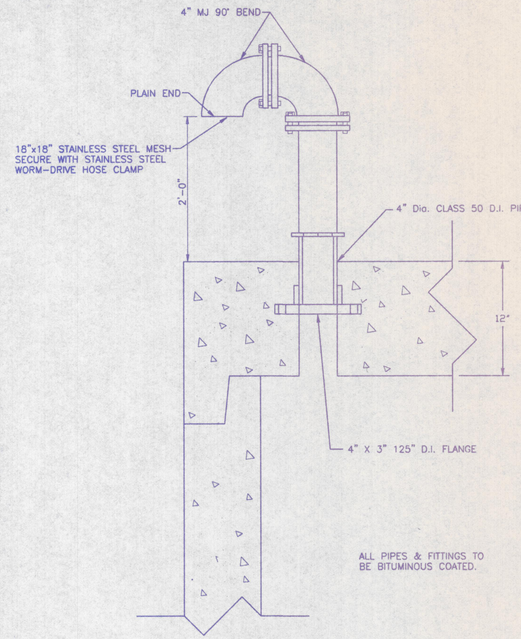

VENT PIPE DETAIL

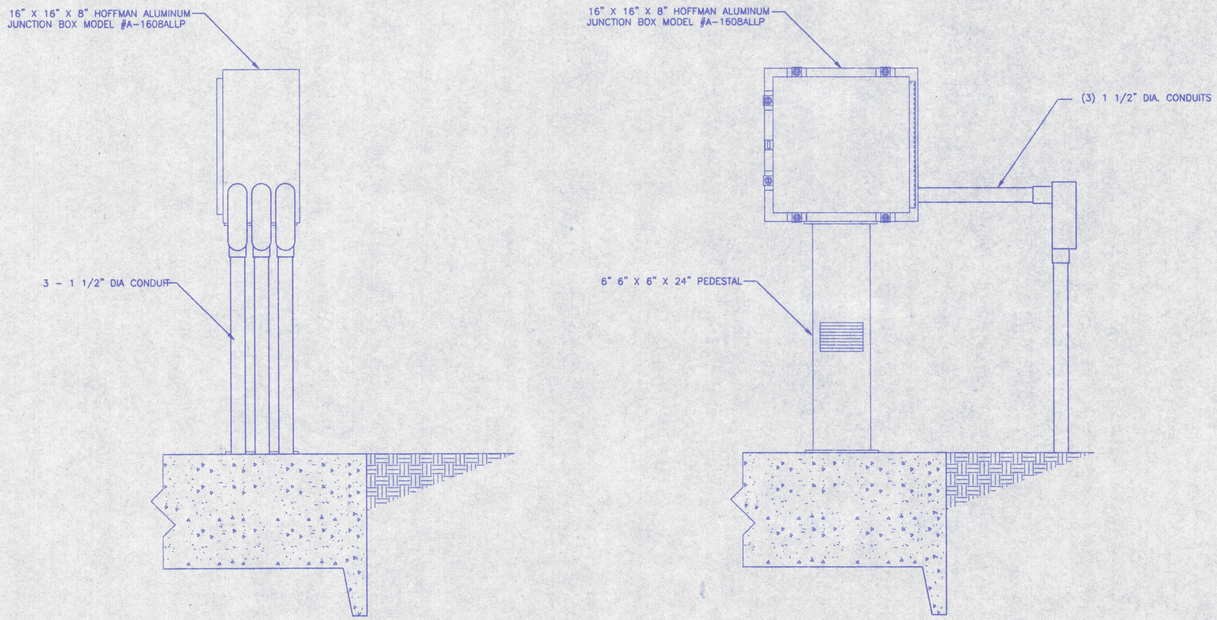

JUNCTION BOX DETAIL

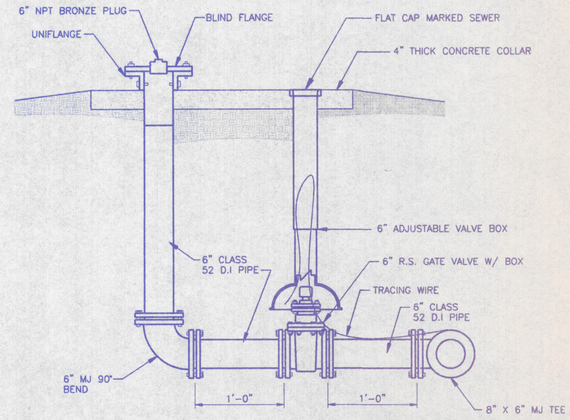

NOTE:
1. USE MEGALUG RESTRAINTS ON ALL MECHANICAL JOINT FITTINGS.

DETAIL EMERGENCY PIPING

REVISION	NO.	DATE

HENRY M. NODARSE REGISTERED No. 19900505 STATE OF INDIANA PROFESSIONAL ENGINEER
9/10/99

VANDERBURGH INDUSTRIAL PARK
LIFT STATION DETAILS
FOR
EVANSVILLE INDUSTRIAL FOUNDATION
VANDERBURGH COUNTY, INDIANA

Prepared By
BERNARDIN LOCHMUELLER & ASSOC., INC.
Planners · Engineers · Surveyors
6200 Vogel Road
Evansville, IN 47715 (812)479-6200

DATE: 9/8/99
PROJECT NO.: 199-0077 OPD
ISSUED: FOR CONSTRUCTION
SHT. 35

S:\Projects\199-0077\Topo\LiftStat.dwg 09/08/99 11:15 Paul