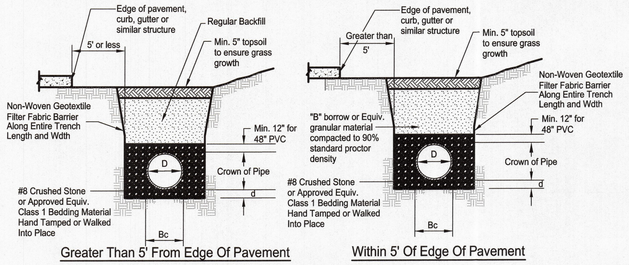

Minimum Trench Widths

D	Min. Width
12"	31"
15"	35"
18"	43"
24"	56"
30"	66"
36"	78"
42"	84"
48"	91"
54"	97"
60"	103"

Notes:

1. All bedding & initial backfill shall be installed in 6" to 8" balanced lifts
2. A minimum cover of 12" shall be provided from the top of pipe to the ground surface.
3. Installation shall be in accordance with the pipe manufacturer's minimum recommended standards and / or this detail, whichever is greater.

Legend:

Bc = Outside Diameter
D = Inside Diameter
d = Depth of Bedding Material Below Pipe

Depth of Bedding Material Below Pipe

D	(d) Min.
10" to 48"	4"

HDPE Pipe Bedding

No Scale

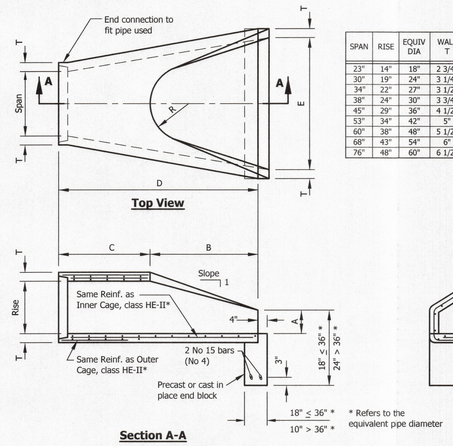

SPAN	RISE	EQUIV DIA	WALL T	A	B	C	D	E	H	R	R1	R2	SLOPE
23"	14"	18"	2 3/4"	8"	27"	3'-9"	6'-0"	36"	5 3/8"	6"	6"	20"	1:3.1
30"	19"	24"	3 1/4"	8 1/2"	39"	33"	6'-0"	4'-0"	6 7/8"	7"	8 1/4"	26 1/4"	1:2.8
34"	22"	27"	3 1/2"	9"	4'-0"	24"	6'-0"	4'-6"	7 3/4"	8"	9 1/4"	29 1/4"	1:2.9
38"	24"	30"	3 3/4"	9 1/2"	4'-6"	18"	6'-0"	5'-0"	8 5/8"	9"	10 1/4"	32 3/4"	1:2.9
45"	29"	36"	4 1/2"	11 1/4"	5'-0"	36"	8'-0"	6'-0"	10 1/2"	12"	12 1/4"	39 1/4"	1:2.7
53"	34"	42"	5"	15 3/4"	5'-0"	36"	8'-0"	6'-6"	12 1/8"	13"	14 1/2"	3'-10"	1:2.6
60"	38"	48"	5 1/2"	21"	5'-0"	36"	8'-0"	7'-0"	13 1/2"	14"	16 1/2"	4'-3 1/2"	1:2.7
68"	43"	54"	6"	26"	5'-0"	36"	8'-0"	7'-6"	15 1/4"	16"	18 3/4"	4'-10 1/2"	1:2.6
76"	48"	60"	6 1/2"	31"	5'-0"	36"	8'-0"	8'-0"	17"	18"	20 3/4"	5'-5"	1:2.6

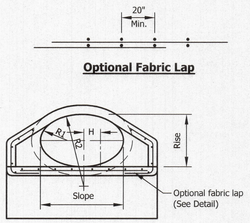

Elliptical Concrete End Section

No Scale

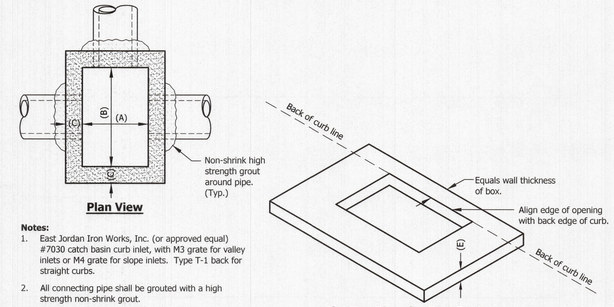

Notes:

1. East Jordan Iron Works, Inc. (or approved equal) #7030 catch basin curb inlet, with H3 grate for valley inlets or M4 grate for slope inlets. Type T-1 back for straight curbs.
2. All connecting pipe shall be grouted with a high strength non-shrink grout.
3. Precast units shall conform to ASTM C-478.
4. The inlet shall be backfilled with "B" Borrow and mechanically compacted in 6" lifts to 95% of standard density ASTM-698.

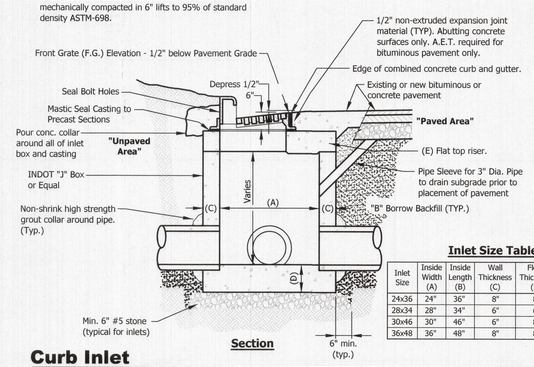

Inlet Size Table

Inlet Size	Inside Width (A)	Inside Length (B)	Wall Thickness (C)	Floor Thickness (D)	Flat top Thickness (E)
24x36	24"	36"	8"	8"	None Req.
28x34	28"	34"	6"	6"	8"
30x46	30"	46"	6"	8"	8"
36x48	36"	48"	8"	8"	8"

Curb Inlet

No Scale

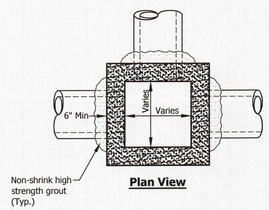

Notes:

1. For Area Inlet in pavement East Jordan #8306 casting or equal with Type M grate. For Area Inlet in non-paved areas: East Jordan #6500 casting, or equal, with adapter ring.
2. For Manhole East Jordan #8306 casting with Type A solid cover or equal. Contractor may substitute East Jordan #1022-1 casting with Type A solid cover, or equal.
3. All connecting pipes shall be grouted with a high strength non-shrink grout.
4. Precast box shall conform to ASTM C-478.
5. Reinforcement shall be 3" x 6" W3.0xW2.0 wire fabric for precast units.
6. The inlet shall be backfilled with "B" Borrow and mechanically compacted in 6" lifts to 95% of standard density ASTM 698.

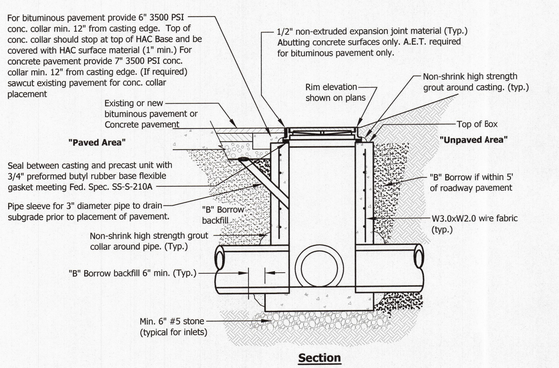

Storm Manhole - Precast Box

No Scale

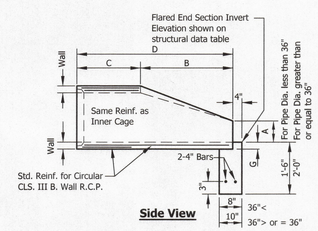

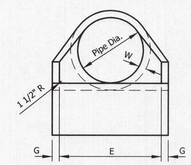

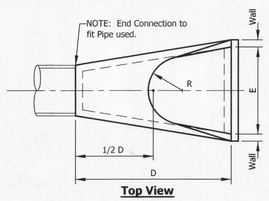

PIPE DIA.	WGT. (LBS)	WALL	A	B	C	D	E	G	R	SLOPE
12"	530	2 1/4"	8"	2'-1/4"	4'-1 1/2"	6'-1 3/4"	1'-11 3/4"	2 1/4"	9"	2:1
15"	900	2 1/4"	9"	2'-3"	3'-10"	6'-1"	2'-6"	2 1/4"	11"	2:1
18"	1000	2 1/2"	11 1/2"	2'-3"	3'-10"	6'-1"	3'-0"	2 1/2"	1'-0"	2:1
21"	1280	2 3/4"	10"	2'-11"	3'-2"	6'-1"	3'-6"	2 3/4"	1'-1"	2:1
24"	1600	2 3/4"	1'-0"	3'-8"	2'-6"	6'-2"	4'-0"	2 3/4"	1'-2"	2:1
27"	1930	3 1/4"	10 1/2"	4'-0"	2'-1 1/2"	6'-1 1/2"	4'-6"	3 1/4"	1'-2 1/2"	3:1
30"	2250	3 1/2"	1'-0"	4'-6"	1'-7 3/4"	6'-1 3/4"	5'-0"	3 1/2"	1'-3"	3:1
33"	3200	3 3/4"	1'-1 1/2"	4'-10 1/2"	3'-3 1/4"	8'-1 3/4"	5'-6"	3 3/4"	1'-5 1/2"	3:1
36"	4480	4"	1'-4 3/4"	5'-3"	2'-10 3/4"	8'-1 3/4"	6'-0"	4"	1'-8"	3:1
42"	5380	4 1/2"	1'-9"	5'-3"	2'-11"	8'-2"	6'-6"	4 1/2"	1'-10"	3:1
48"	6550	5"	2'-0"	6'-0"	2'-2"	8'-2"	7'-0"	5"	1'-10"	3:1
54"	8240	5 1/2"	2'-3"	5'-5"	2'-11"	8'-4"	7'-6"	5 1/2"	2'-0"	2:1
60"	8730	6"	2'-11"	5'-0"	3'-3"	8'-3"	8'-0"	5"	*	2:1
66"	10710	6 1/2"	2'-6"	6'-0"	2'-3"	8'-3"	8'-6"	5 1/2"	*	2:1
72"	12520	7"	3'-0"	6'-6"	1'-9"	8'-3"	9'-0"	6"	*	1.86:1
78"	14770	7 1/2"	3'-0"	7'-6"	1'-9"	9'-3"	9'-6"	6 1/2"	*	1.82:1
84"	18160	8"	3'-0"	7'-6 1/2"	1'-9"	9'-3 1/2"	10'-0"	6 1/2"	*	1.5:1

B. Concrete End Section

No Scale

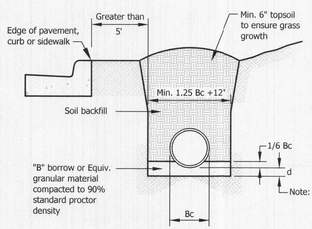

Depth of Bedding Material Below Pipe

D	(d) Min.
27" & Smaller	3"
30" to 60"	4"
66" & Larger	6"

Legend:

Bc = Outside Diameter
D = Inside Diameter
d = Depth of Bedding Material Below Pipe

Note: *
All bedding & initial backfill shall be Installed in 6" to 12" balanced lifts.

A minimum 9" of clearance shall be provided on each side of the installed pipe.

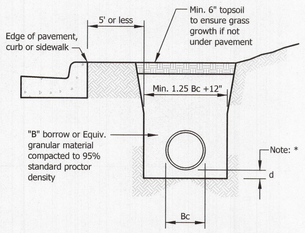

Reinforced Concrete Pipe (Circular and Elliptical) Storm Sewer Bedding

No Scale

Received by the Vanderburgh County Surveyor's Office
APR 26 2022
Time 10:00 AM Initials AK

JAMES E. MORLEY REGISTERED No. 10100025C STATE OF INDIANA PROFESSIONAL ENGINEER
4-26-22

Revisions		
No.	By	Date

All ideas, designs, calculations, and arrangements indicated or represented by this drawing are owned by and are the property of Morley and Associates, Inc. and were created as instruments of service for use on and in connection with the specified project. Morley and Associates retains all common law, statutory law and other rights, including copyrights. No drawings or electronic files shall be reused for any purpose other than the project. They shall not be disclosed to or be used by any other person or firm without the written prior consent of Morley and Associates, Inc.
Written dimensions on these drawings shall have precedence over scale dimensions. Contractors shall verify and be responsible for all dimensions and conditions on the job and Morley and Associates, Inc. must be notified of any variations from the dimensions and conditions shown by these drawings.
If differences exist between electronic files and the signed and sealed hard copy drawings, the hard copy shall govern.

MORLEY
ARCHITECTS | ENGINEERS | SURVEYORS
4800 Rosebud Ln., Newburgh, IN 47630 812.464.9585 Phone 812.464.2514 Fax
morleycorp.com

Project: Eleanor's Place

Sheet Title:

Drainage Details - 1

Vanderburgh County, IN

Scale: As Noted	
Designed By: JEM	Job Number: 11822.4.001-B
Drawn By: CRS	Date: 4.26.2022
Filename: 11822 Civil Base	
Sheet Number: C504	